Building Inspection Division
THESE PLANS HAVE BEEN REVIEWED FOR COMPLIANCE WITH THE CURRENT EDITION OF THE FLORIDA BUILDING CODE
Date: 11/15/19
Permit Number: BLD19-06035

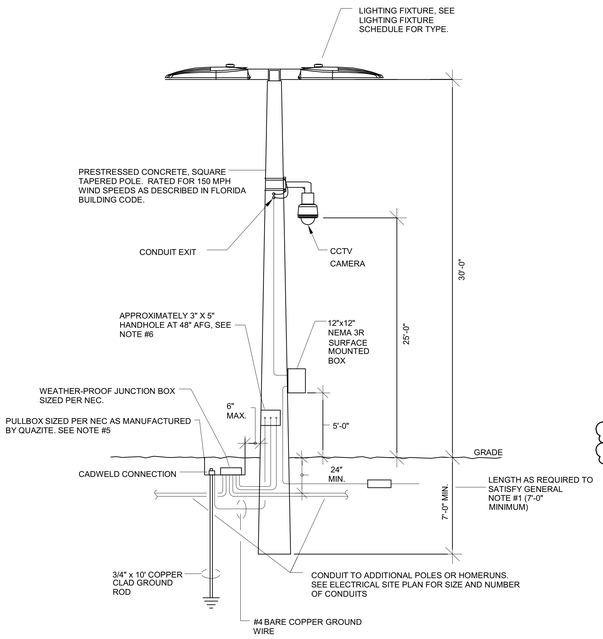

GENERAL NOTES:

1. CONTRACTOR TO SUBMIT DESIGN WIND LOAD CALCULATIONS CERTIFYING CONFORMANCE OF POLE ASSEMBLY AS DICTATED BY THE FLORIDA BUILDING CODE. EACH CALCULATION SHALL BE SIGNED AND SEALED BY A STATE OF FLORIDA LICENSED STRUCTURAL ENGINEER.
2. FURNISH AND INSTALL BUSSMAN "TRON" TYPE "HEB" IN-LINE WATERPROOF FUSE HOLDERS. FUSE WITH BUSSMAN TYPE "FNM" FUSES, FUSED AT 1.0A. LOCATE FUSES IN POLE HAND HOLE.
3. COORDINATE ALL WORK WITH CIVIL AND LANDSCAPE SITE PLANS.
4. POLES SHALL BE FACTORY EQUIPPED WITH GROUNDING STUDS. EQUIPMENT GROUNDING CONDUCTOR SHALL BE BONDED TO THE GROUND STUD.
5. PULLBOX MANUFACTURED BY QUAZITE W/15,000 LBS DESIGN LOAD TO HAVE HEAVY-DUTY COPOLYMER FULL D.O.T. TRAFFIC RATED HANDHOLE WITH COVER (COVER TO READ "ELECTRICAL"). FURNISH AND INSTALL GRAVEL (1FT.) IN BOTTOM OF PULLBOX FOR DRAINAGE IN ACCORDANCE WITH MANUFACTURER'S INSTRUCTIONS.
6. ROUTE CONDUIT CONTINUOUS THRU POLE ASSEMBLY AND TERMINATE WITH INSULATION BUSHING AT HAND-HOLE WINDOW.
7. PROVIDE MINIMUM (1) 3/4" CONDUIT INSIDE POLE FOR CCTV CABLING. CONDUIT SHALL EXTEND FROM BOTTOM OF POLE TO SURFACE MOUNTED BOX, AND FROM SURFACE MOUNTED BOX TO WITHING 5'-0" OF TOP OF POLE.
8. ALL SITE LIGHTING POLES SHALL HAVE PROVISIONS FOR CCTV CAMER CONDUITS. REFER TO E1-1-02 FOR POLES THAT WILL HAVE CCTV CAMERAS INSTALLED.

1 SITE LIGHTING POLE DETAIL
E6-1-02 SCALE: N.T.S.

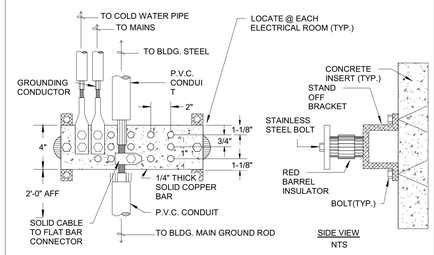

6 MAIN GROUNDING BAR DETAIL
E6-1-02 SCALE: N.T.S.

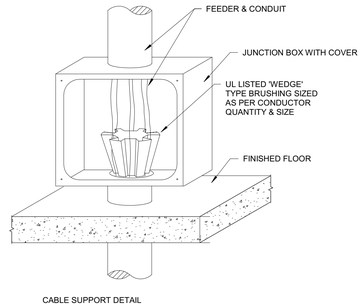

4 CABLE SUPPORT DETAIL
E6-1-02 SCALE: N.T.S.

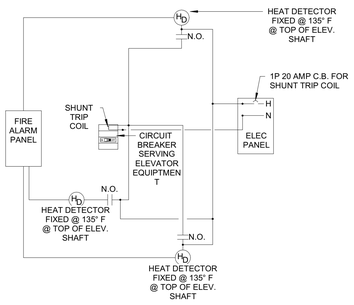

5 ELEVATOR SHUNT TRIP WIRING DIAGRAM
E6-1-02 SCALE: N.T.S.

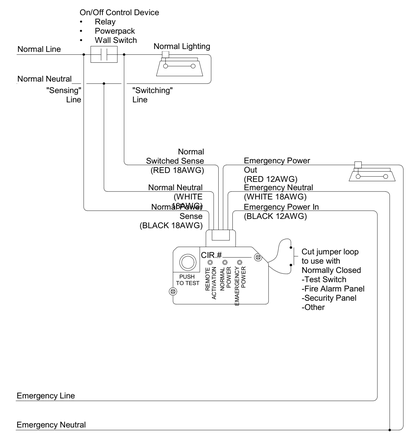

ELCU-200 Typical Wiring
(AS PER WATT STOPPER MANUFACTURER)

13 EMERGENCY LIGHTING CONTROL UNIT
E6-1-02 SCALE: N.T.S.

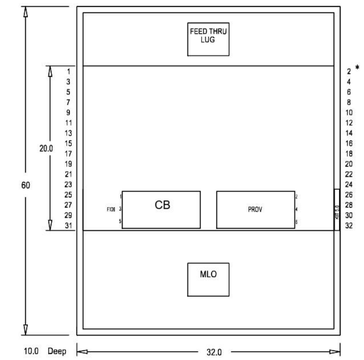

8 FEED-THRU PANEL
E6-1-02 SCALE: N.T.S.

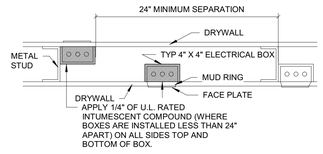

9 BACK TO BACK ELECTRICAL BOX MOUNTING DETAIL FOR RATED WALLS
E6-1-02 SCALE: N.T.S.

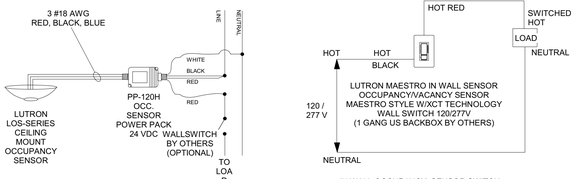

SCALE: N.T.S.

DUAL TECHNOLOGY OCCUPANCY SENSOR

OS WIRE CEILING MOUNTED OCCUPANCY SENSOR - LUTRON SERIES # LOS-CDT-XX-WH

OMS WIRE CEILING MOUNTED OCCUPANCY SENSOR - LUTRON SERIES # OSS-CDT-XX-WH

12 SWITCH WIRING DIAGRAM DIGITAL
E6-1-02 SCALE: N.T.S.

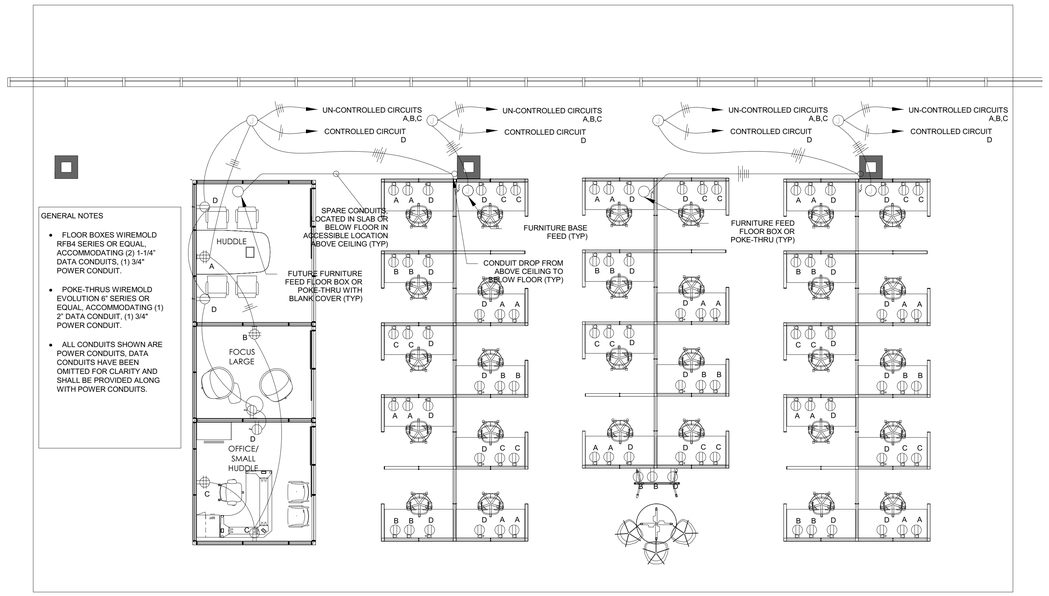

2 FURNITURE WIRING DIAGRAM - TYPICAL
E6-1-02 SCALE: N.T.S.

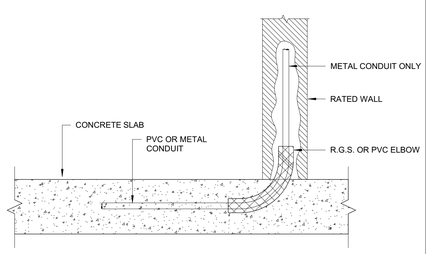

11 CONDUIT IN SLAB DETAIL
E6-1-02 SCALE: N.T.S.

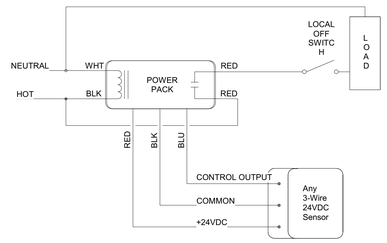

10 ANY 3-WIRE 24VDC SENSOR STANDARD SCHEMATIC
E6-1-02 SCALE: N.T.S.

AECOM
BATSON-COOK CONSTRUCTION

PROJECT

PUBLIX HEADQUARTERS BUILDING ADDITION AND PARKING LOT EXPANSION

3300 PUBLIX CORPORATE PARKWAY
LAKELAND, FL 33811

CLIENT

Publix

3300 PUBLIX CORPORATE PARKWAY
LAKELAND, FL 33811

www.publix.com

CONSULTANT

AECOM
AECOM TECHNICAL SERVICES, INC.
800 Douglas Entrance
North Tower, 2nd Floor
Coral Gables, FL 33134
305.444.4691 tel 305.447.3580 fax
www.aecom.com

ARCHITECTURE
LICENSE NO. AA26000687

ENGINEERING
CA LIC. NO. 8115

http://www.aecom.com

REGISTRATION

HENRYK B. JUSZCZYK, LICENSE NO. 58082, STATE OF FLORIDA, PROFESSIONAL ENGINEER

HENRYK B. JUSZCZYK, PROFESSIONAL ENGINEER, STATE OF FLORIDA, LICENSE NO. 58082

THIS ITEM HAS BEEN DIGITALLY SIGNED AND SEALED BY HENRYK B. JUSZCZYK, PROFESSIONAL ENGINEER, STATE OF FLORIDA, LICENSE NO. 58082 ON THE DATE INDICATED HERE. PRINTED COPIES OF THIS DOCUMENT ARE NOT CONSIDERED SIGNED AND SEALED AND THE SIGNATURE MUST BE VERIFIED ON ANY ELECTRONIC COPIES.

Henryk B Juszczyk
2019.09.30
18:14:39 -04'00'

KEY PLAN

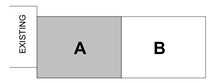

ISSUE/REVISION

I/R	DATE	DESCRIPTION
1	SEP 30, 2019	100% CONSTRUCTION DOCUMENTS
0	AUG 23, 2019	CONSTRUCTION DOCUMENTS

PROJECT NUMBER

60601397

SHEET TITLE

ELECTRICAL DETAILS

SHEET NUMBER

E6-1-02

NOTICE: THE OFFICIAL RECORD OF THIS SHEET IS THE ELECTRONIC FILE SIGNED AND SEALED UNDER RULE 61G15-23.004, F.A.C.

Last Plotted: 9/30/2019 5:05:49 PM
Filename: BM-300160601397-Publix HQ\60601397_Publix HQ_ELECT_R2019.rvt

Printed on ___% Post-Consumer Recycled Content Paper

©2016 AECOM Corporation